Lubricating Linear Rails and Ball Screws

How to lubricate and maintain the linear rails in your Element

Written By: Guy Elston

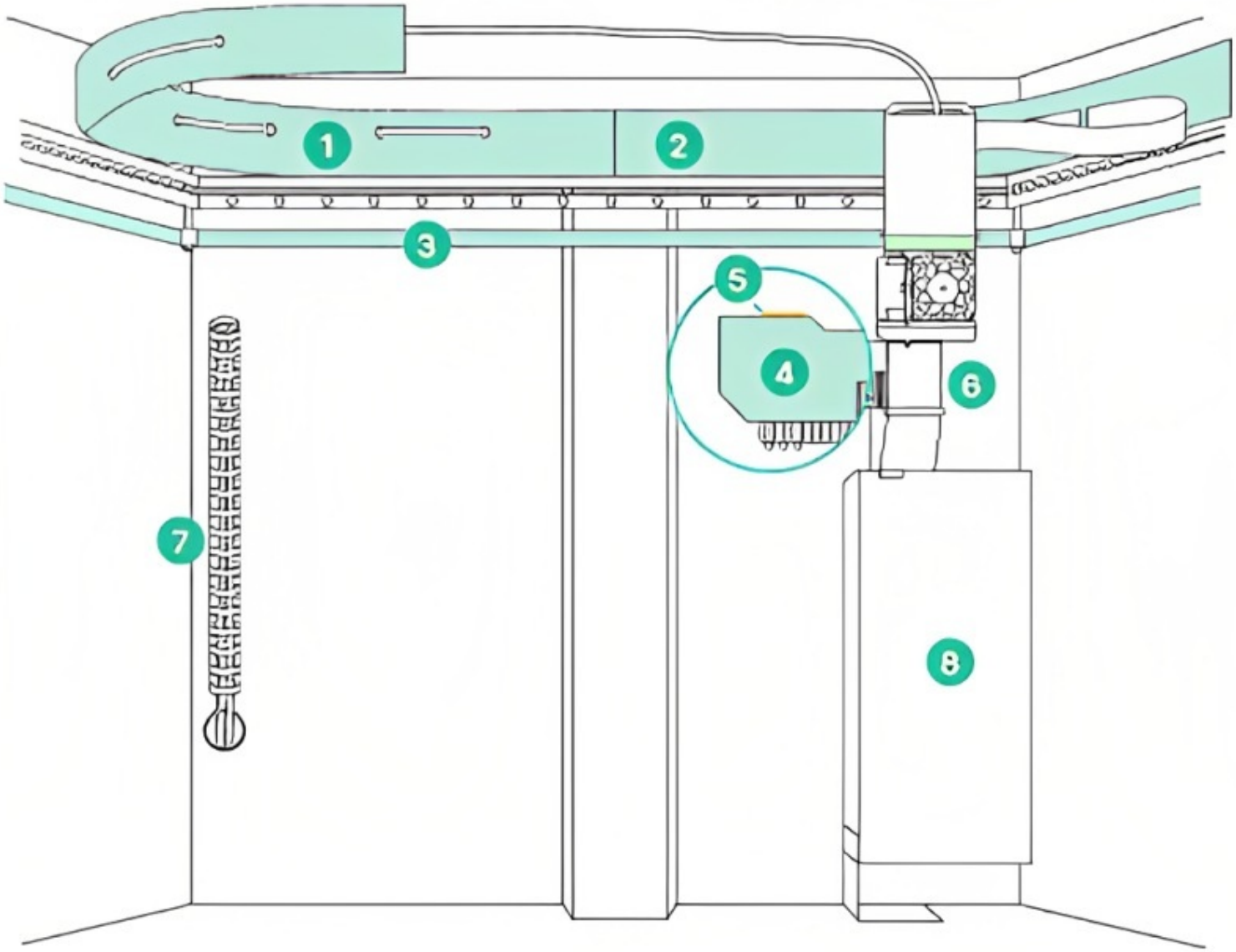

This document was generated on 2023-11-11 10:34:55 AM (MST).

TOOLS:

- Lubricant (1)

This document was generated on 2023-11-11 10:34:55 AM (MST).

Step 1 — Applying Lubricant to Linear Rails

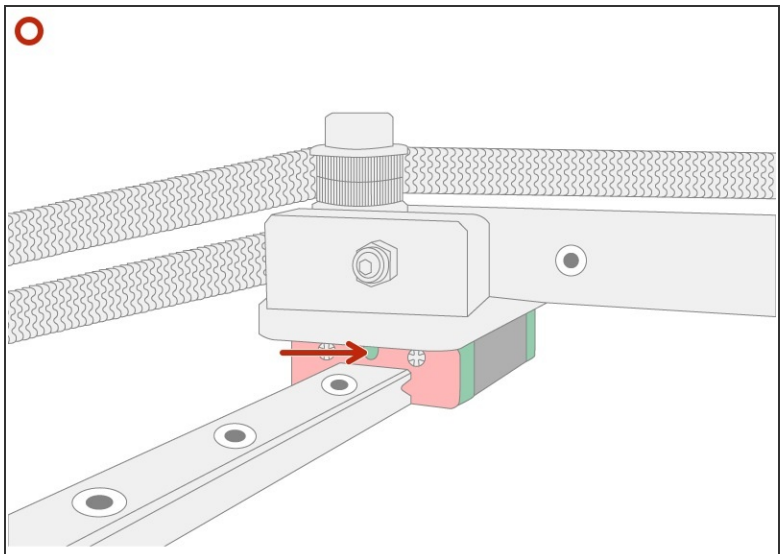

Element Rail Block - left Y axis. Repeat on right Y axis.

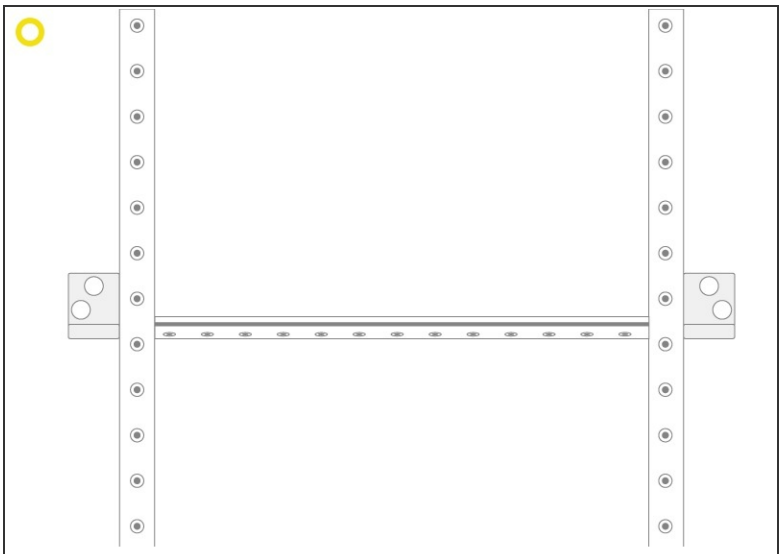

Element chamber - top view of linear rails

- Use a lithium grease or similar synthetic lubricant.
- Using a syringe or eyedropper tool, apply a small amount of lubricant inside the small eyehole of one linear block along the X axis (Printhead rail), and two linear blocks along the Y axes on the left and right side of the printer.
  - Moving the printhead along the X and Y axes will help spread the lubricant.
- Full instructions for lubricating linear guideways and ball screws can be found here.

Step 2 — Applying Lubricant to Ball Screws

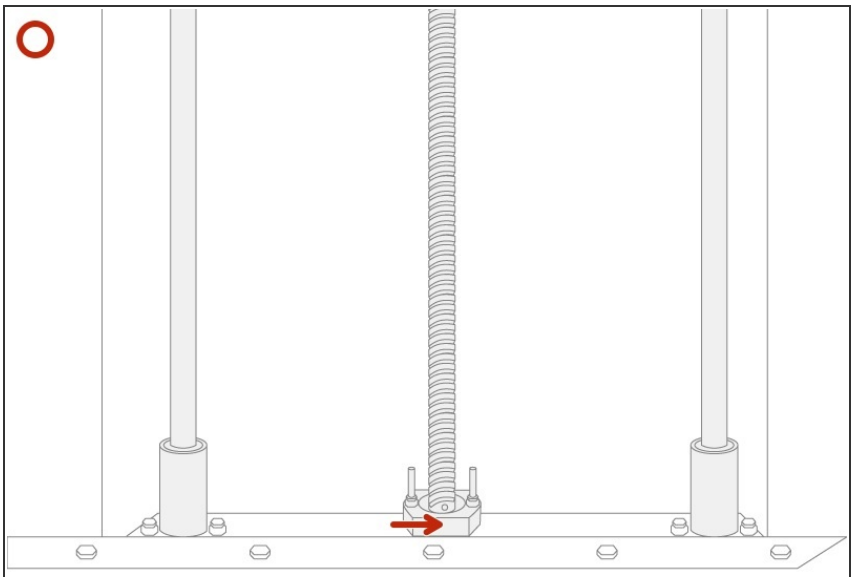

Element chamber - side view of ballscrew and chrome rods

- From inside the printer chamber's left and right sides, apply lubricant into the small eyehole on the ball screw assembly. Move bed up and down to distribute lubricant.

© 2023